Temporary storage

Grain bunkers or pad storages are a convenient form of overspill storage and have been used by the grain industry for over a decade. The use of bunker storage for grain is increasing as permanent stores are required for the expanding canola crop. The original bunkers had earth walls but these were replaced by the A-frame or concrete walls, although earth walls are still suitable for on-farm storage.

What are the requirements for a sealed bunker storage?

The following extract is from *Storing, Handling and Drying Grain* by Alan Andrews. It is reproduced with permission.

A typical grain bunker or pad storage has 3 low earth retaining walls arranged in a U-shape. One end is open for access when filling and emptying. The floor must be above the surrounding level and should slope towards the open end to help drainage. A slope of 1 in 200 is adequate and the floor must be smooth and hard packed. The bunkers are lined with polythene sheeting, filled with grain and covered with a PVC, PVA or polythene top sheet. The top and bottom sheets are then sealed to exclude pests and to allow fumigation. It is advisable to ballast or tie them down to prevent wind damage and rain entry.

Figure 2: Above-ground, plastic-covered grain bunker (pad storage). Much larger bunkers are used by bulk handling organisations.

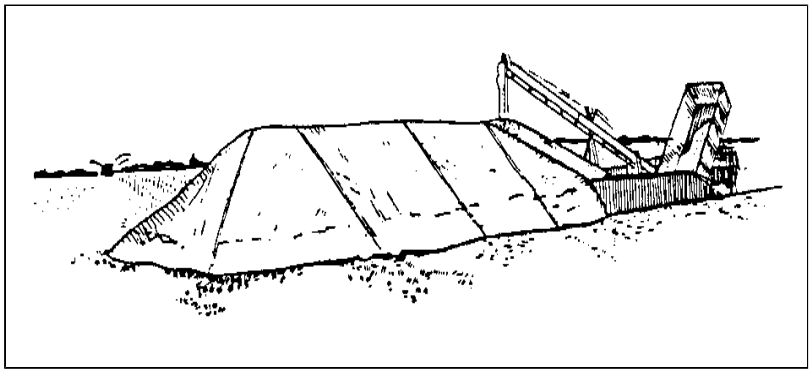

All earth walls must slope away from the stack. The walls should be pushed up from the immediately adjacent surface outside the bunker walls. This creates a drainage structure around the bunker and is essential to collect run-off from the plastic covers. The walls should be about 0.5 metres high and 1.5 metres wide at the base, with a 45º side slope. Walls higher than 0.5 metres are difficult to construct using simple earthmoving machinery.

Use front-end loaders or mobile augers to unload the dump. Always work from one end of the dump to the other in order to retain a uniform shape. Good access for trucks and handling equipment is also necessary.

Bunkers should not be extended to increase capacity after loading has begun, as it is difficult to maintain a high standard of drainage in the new section.

The height to which handling equipment can stack grain, and the wall height are the

two factors that determine the width of the bunker (see figures 3 and 4). Table 1 indicates capacities of various sized bunkers based on a 0.5 metre wall height.

Table 1: Wheat bunker dimensions (wall height of 0.5 metres only)

Grain height, H (metres)	Storage width, W (metres)	Storage length, L (metres)					Extra length per 50 t of grain (metres)
		200 t	300 t	400 t	500 t	600 t	
2.0	7.0	34	50	66	82	-	8.0
2.5	9.0	24	34	44	54	64	5.0
3.0	11.5	18	25	32	39	46	3.5
3.5	14.0	15	20	25	30	35	2.5
4.0	16.0	-	18	22	26	30	2.0

Wheat bulk density = 750 kg/m³

Figure 3: Bunker cross-section (not to scale)

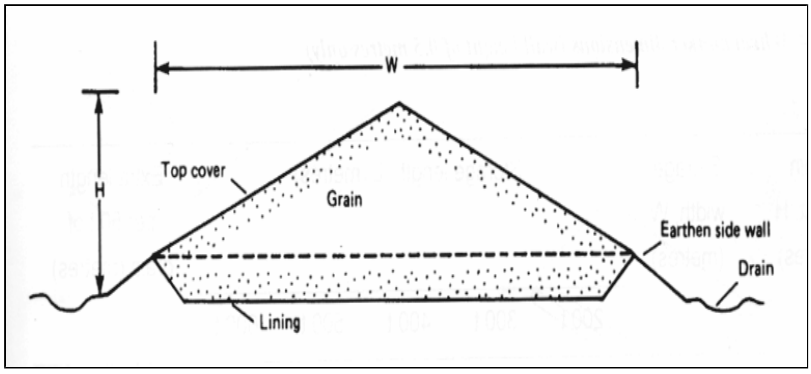

Figure 4: Longitudinal section of bunker (not to scale)

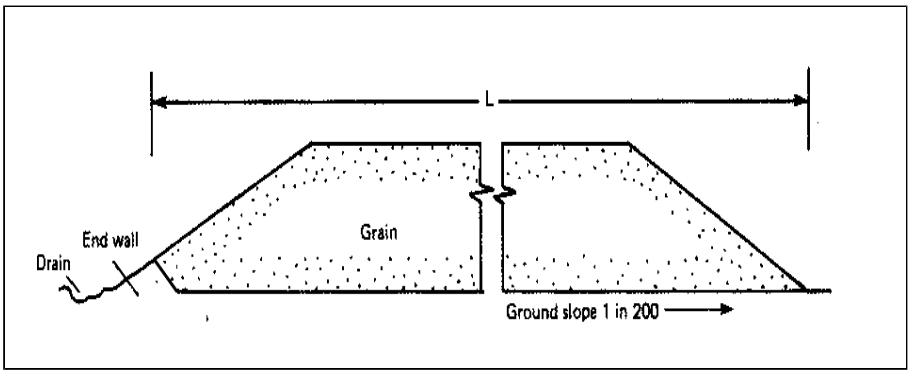

Several small bunkers are preferred to one large bunker. This allows them to be

located at various sites and makes covering and unloading easier.

Bunkers are often protected with waterproof synthetic covers.

Factors to consider when selecting sheeting are:

- **resistance to water penetration and puncturing**
- **strength to withstand handling and wind loads**
- **life of sheet when exposed to sunlight (UV resistance)**
- **ability to join sheets in the field**
- **cost and availability.**

It is an advantage to align the bunker so that the closed end faces into the prevailing wind. This will reduce cover handling problems when covering the stack. Bunker storages should be covered with a single piece, prefabricated top cover. Joining methods for use on-farm are both difficult and unreliable. The bunker should be covered as it is filled to avoid problems caused by sudden storms. A temporary, easily removed cover should be placed over the exposed grain face at night.

The plastic floor and wall lining prevents moisture entry and soil contamination in the base of the stack. It also allows the storage to be sealed at the junction of the top and floor covers.

A conventional mobile auger is suitable for loading and unloading. A smoother, higher stack will be achieved if a grain thrower or directional chute is used in conjunction with an auger for unloading. Hand trimming is necessary to avoid depressions where rainfall may collect. [Grain is inloaded until flush with the side wall to form a smooth, even surface free from depression, so that water can run freely off the top covers and away from the store.]

A single cover folded and rolled as shown in Figure 4 is easiest to place. The bundle is rolled from one side to the other across the top of the stack. One end of the cover can be pulled back to cover the end of the stack, and the rest unfolded as necessary. Do not attempt to handle large covers in windy conditions. Always ballast the leading edge of the cover during loading and unloading.

Figure 4: Covers are firstly rolled concertina fashion (a), then rolled (b), to simplify placement on the grain

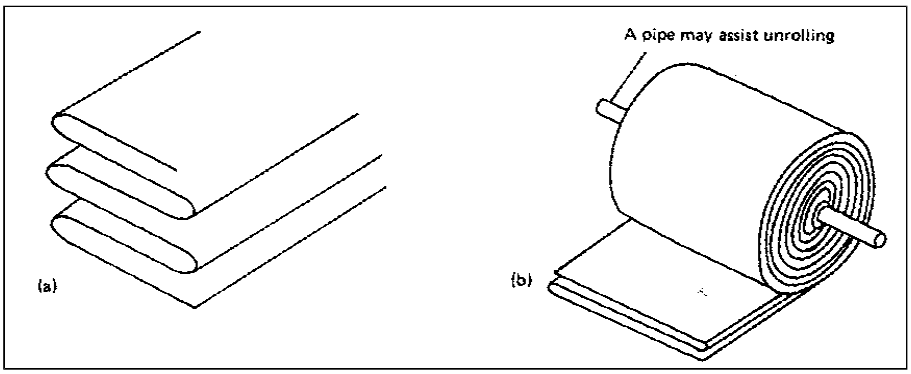

Grain covers must be effectively sealed to prevent wind lift of the top cover and prevent insects and water entering the stack. One simple method of sealing the top and floor covers is shown in Figure 5. A sweep auger or front end loader will assist with unloading. Careful removal and storage of the covers will allow them to be used again.

Figure 5: A method of sealing top and bottom covers

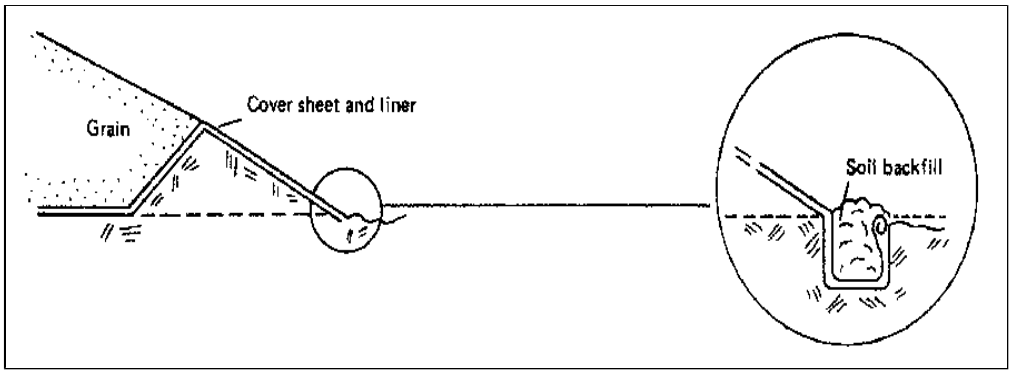

[End of extract from *Storing, Handling and Drying Grain* by Alan Andrews.]

Are bunker stores a form of sealed storage?

If bunker stores are properly made with a good seal between the top and bottom sheets they can be treated as a sealed store for fumigation purposes. This means that a phosphine blanket or a tray with tablets or pellets can be inserted under the sheet and the gas will disperse itself through the grain. Dispersal is normally assisted by the movement of the top sheet, caused by the wind. The formulation should not be placed under a very tight part of the sheet, as the phosphine gas needs to disperse away from the tablets or blanket. (Fires have been caused when the gas was not able to disperse through the grain.) The spent blanket or powder can be removed 3 or 4 weeks later without the grain being contaminated.

What are the essential maintenance requirements for a bunker store?

Grain in a bunker store is particularly vulnerable to insect infestation, rodent damage and moisture migration or water ingress which can cause extensive crusting (stackburn). The grain must be fumigated and should be dry. It is essential to carry out regular external inspection for:

- rodent damage
- tears or signs of water entry
- spear sampling for insects and signs of moist grain.

Mesh silos. Storage bins made from steel mesh lined with gauze, hessian or polythene are a cheap and quickly constructed temporary storage. A typical bin holds about 30 tonnes of wheat. The grain in these bins needs to be treated with grain protectant. Filling and emptying of these silos needs careful attention—see Andrews 1996.

Underground storage

Underground pits are an effective, low-cost method of long-term grain storage. Their most common use is for storing drought feed reserves on farms, and grain for this use has been recovered in good condition after more than 10 years. The main drawback of underground storage is the difficulty of removing grain.

What does underground pit storage have to offer?

Underground pits have been used for long-term storage since the earliest grain harvests. This is a method for conserving grain for animal feed rather than for human consumption. The pit is hermetically sealed and, due to low temperature and reduced oxygen levels, there should be little insect activity, although aluminium phosphide could be introduced initially. Grain which is overmoist or becomes damp in the storage will be tainted, but this should not affect its feed value if it is airtight. It is said that in some parts of the world local people prefer the taste of pit stored grain to that of normal fresh grain.

Alan Andrews (1996) has given the following description in *Storing, Handling and Drying Grain*:

The grain moisture should be less than 12%. The pit must be located on a well drained site with the immediate surrounds graded to prevent run-off collecting in the pit area. Keep adjacent pits at least 10 metres apart to prevent seepage from an empty pit to a full one. The pit should be not more than 3 metres wide. This allows the covering soil to be placed and removed by a front-end loader without having to drive over the top of the grain. The pit may be lined with polythene and loaded by an augur or a tipper. After filling, the pit should be sealed with a top cover and this in turn should be covered with straw, sand and soil shaped to run-off. Always unload the entire contents once the pit is opened as it may be very attractive to pests and prone to water damage.

Figure 6: A method of sealing top and bottom covers

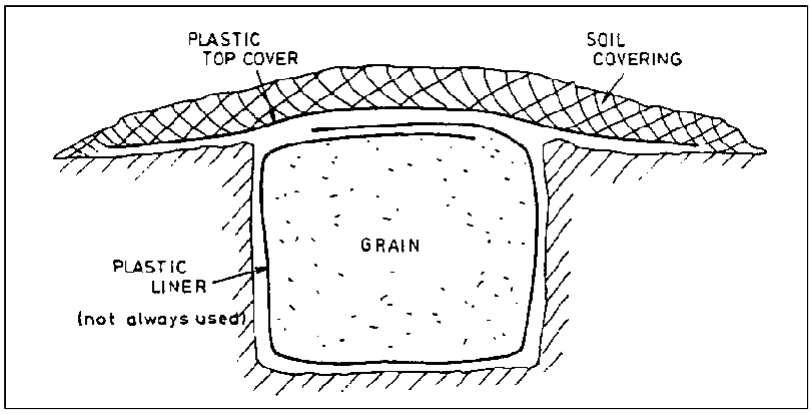

Covering the pit

The following extract is from Agriculture Protection Board *Infonote No. 1*, November 1984, by Bevan Uren.
Acknowledgement: David McDonald of Lake Biddy, who provided much of the practical information.
Edited by Clare Johnson and reproduced with permission of the Agriculture Protection Board.

Covering the pit

If pits are lined, all horizontal joints must overlap with the higher sheets outside the lower ones. Water will then flow down the outside of the sheets without entering the grain. The pit should be filled with grain to ground level at the sides, sloping up to a ridge of grain along the centre line to encourage water shedding.

Before covering with soil, lay polythene sheet across the ridged grain and for about 2

metres either side of the pit. Sheets should overlap at least 20cm at the edges and full sections should be used without cross joins. Medium grade 0.1mm polythene will resist breakage by lumpy overburden better than 0.05mm.

Sheeting is generally not reused as the cost is small and damage during uncovering is inevitable.

Care over forming a water-shedding cover is the most important aspect of underground storage after the selection of a dry site. Quick run-off from a smooth covering mound is the main aim together with sufficient depth of soil to exclude air and insulate the grain from large temperature changes. The soil cover needs to be about 1.3m deep, sloping to ground level well clear of the pit. Peg the corners to allow easy location when emptying.

A modified cover which speeds up the opening of a pit is to attach the polythene to sections of welded steel mesh. These are long enough to span the pit in one section and are placed overlapping in the reverse order of removal. Once the overburden has been reduced to about 20cm deep by blade or loader, the mesh sections and remaining soil can be towed off with little soil contamination to grain.

During the first winter the soil cover may need to be re-formed and smoothed after settling to eliminate cavities and promote run-off. Little else is needed except to see that after all the earthmoving and traffic no depressions which hold water remain near the pit. Periodic checking for rats and mice may be necessary but they are generally deterred by a well-compacted soil cover.

Safety

When emptying the pit with an auger operated from the ground surface there is a risk of injury to anyone falling into the cone of grain. This risk is increased by irregular edges to pits, deep grain and slippery polythene. Great care should be taken when moving near the pit, and if left open for any period, pits should be fenced or refilled with soil to avoid the hazard to people and stock.

Bag storage

It is relatively easy to store bags on pallets and to fumigate a stack of bags covered with plastic sheets.

Fumigation under sheets. Sheets should overlap by 1 metre and should be held down with chains or sandsnakes (a tube of polythene packed with sand).

What are the conditions which lead to improved gastightness?

- Stacks must be built on impermeable floors, preferably with a underlying sheet.
- Proper fumigation sheets, preferably reinforced PVC or coated woven polythene 200–250 *u*m thick, must be used.
- Standard stack sizes should match the sheet size.
- There must be complete and easy access to the sides and tops of stacks, with at least 1 metre between stacks.
- Sheets must be inspected and holes repaired.
- Overlapping sheets must be sealed with rolled joints and clip.
- Sheets must give a metre overlap on the ground.
- The stack must be checked for leaks after the fumigant is put in.
- The commodity must be dry enough to be sealed without sweating.

- An adequate dose of phosphine must be used.

For bags held in a warehouse, it may be possible to keep the stacks under polythene film, but only if the commodity is cool and very dry. Bags may also be kept in cooled, air-conditioned warehouses, or in sealed rooms.

We now turn to Grain handling equipment. Make your choice from the sidebar.